HG 16-500 / 01067000 / TV 00 / EU 230V

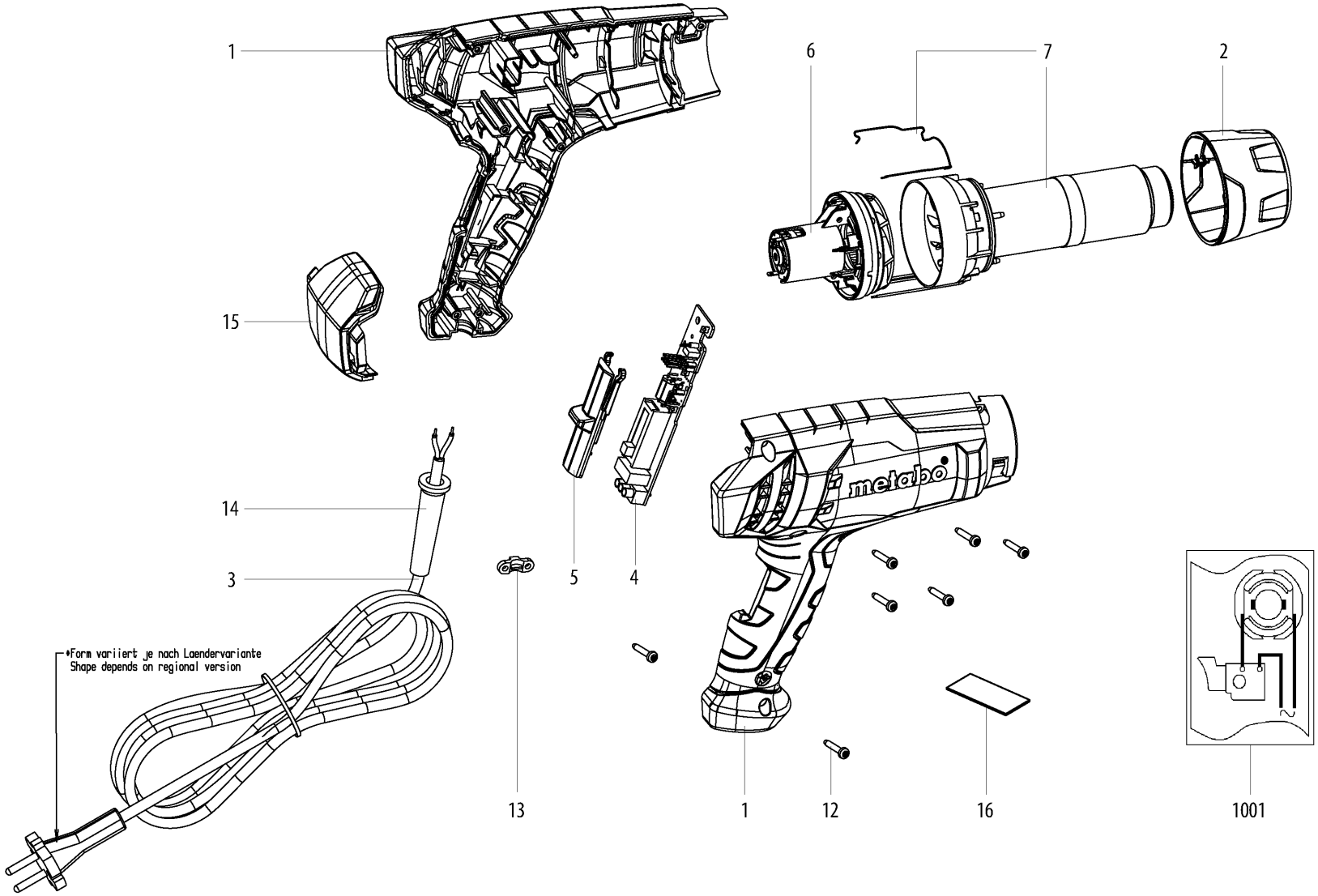

HG 16-500 / 01067000 / TV 00 / EU 230V

Pos.	Part No.	Description	Quant.	Price	Currency abbreviation
1	316099850	Housing compl.	1	68.07	BGN
2	343453520	Protective tube	1	15.00	BGN
3	316072580	Cable with plug	1	29.68	BGN
4	343088370	Terminal, 230V HG 16-500	1	59.38	BGN
5	343453540	Switch slide	1	38.15	BGN
6	317005380	Motor unit	1	42.48	BGN
7	341167410	Heating element, 230V HG 16-500	1	95.54	BGN
12	141121960	Self-tap. fill. h. screw	7	2.16	BGN
13	343375340	Cable clip	1	2.38	BGN
14	344098860	Cable sleeve	1	4.36	BGN
15	343453510	covers of guide rod	1	15.00	BGN
16	338073720	Rating plate	1	2.38	BGN
1001	338510640	Diagram	1		